PRODUCT SPECIFICATION

ALKALINE 9V BATTERY

Type Designation : 6LR61/ 9V

Prepared by : 裘凝

Checked by : 張宛

Approved by : 黃鵬

Issued Date : 2016-03-31

Импортер/Поставщик: ООО «А Зет»,
Российская Федерация, 142072, Московская область, г. Домодедово, мкр. Востряково влад. «Триколор», стр.4. Тел: +7(495)926-50-50

RECORD OF REVISION

TYPE DESIGNATION:6LR61

REV. No.	REASON	CONTENTS	DATE	PREPARE	REMARK
0	Initial Release		2016-03-31	Xuan. Q	

1. Scope:

This specification is applicable to CTAPT SUPER ALKALINE cell, 6LR61 (Mercury & Cadmium & Lead free).

2. Law & Regulation Compliances:

This product complies with EU's battery directive (2013/56/EU).

Packaging materials comply with EU's directive on packaging materials and waste (94/62/EC)

3. General:

3.1 Type designation

IEC/ JIS 6LR61
ANSI 1604A
Common 9V

3.2 Chemical system: Zn/KOH-H_2O/MnO_2

3.3 Nominal voltage: 9.0 V

3.4 Weight: Approximate 44.0 g

3.5 Dimension (mm)
The dimensions shall be in accordance with the below figures both prior to and after service output test. Measuring equipment shall be with an accuracy ±0.05mm at least.

/	min	max
H	46.5	48.5
S	-	46.4
F	12.45	12.95
L	24.5	26.5
W	15.5	17.5

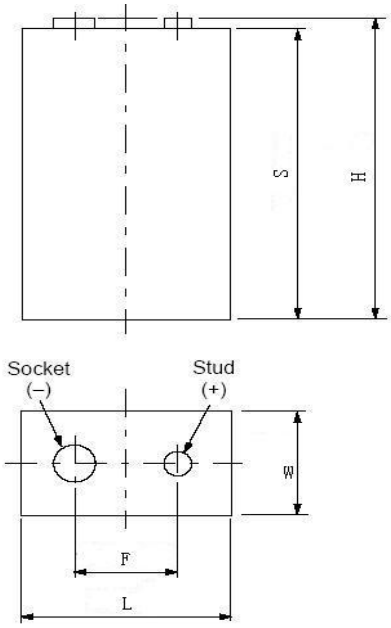

3.6 Capacity: Approximate 625 mAh (35mA, 24h/d, 20℃, e.v.= 5.4V)

3.7 Operation temperature : -18℃~50℃
Recommend storage temperature : Not exceed 30℃

3.8 Heavy Metal Contents: Hg ≤1 ppm, Cd≤20ppm, Pb≤40ppm

Импортер/Поставщик: ООО «А Зет», Российская Федерация, 142072, Московская область, г. Домодедово, мкр. Востряково влад. «Триколор», стр.4. Тел: +7(495)926-50-50

4. Appearance

The battery visually inspected by unaided eye 30cm away from battery. The battery shall be free from dents, scratch, rust and extruded internal compounds, such as sealing compounds and etc, and serious displacement of artwork. Appearance defects shall not be observed that may adversely affect actual use or performance of batteries.

5. Electrical Characteristics

Unless otherwise stated, all measurements are to be performed at a
Standard Environment of **20 ± 2°C**
55 ± 20% RH.
All samples are normalized for 8 hours at least at the above environment prior to measurement.
The digital voltmeter (DCM) is with the precision of 1mV (internal resistance not less than 1 Megohm).
The load resistance of the total circuit is accurate within ±0.5% of the specified value.

5.1 Open circuit voltage and closed circuit voltage (Load resistance 180Ω, 0.3S)

/		**OCV(V)**	**CCV(V)**	**S.C.(A)** *(reference)*
Initial	Min	9.2	8.8	3.0
	Normal	9.6	9.4	4.5
Stored 1 year	Min	9.0	8.5	2.0
	Normal	9.4	9.2	3.5

5.2 Service output

Load		**35mA**	**270Ω**	**620Ω**	**Background [3]: 10 000Ω Pulse:620Ω**
Test mode		**24h/d**	**1h/d**	**2h/d**	**24h 1 s per h**
End voltage		**5.4V**	**5.4V**	**5.4V**	**7.5V**
Applications		Reference	Toy	Radio	Smoke detector
Unit		h	h	h	d
Initial	MAD	13.5	17.5	43.5	17.5
	Normal	15.0	19.5	47.0	20.0
Stored 1 year	MAD	12.0	16.5	42.0	16.0
	Normal	14.0	18.5	45.0	18.0

m: minute h: hour d: day

Remark: 1) The initial discharge test shall commence within 30 days of manufacture. During stored period, the cells shall be stored under 20±2℃, RH 55±20% conditions.

2) Lot release service output test is conducted by 35mA continuous discharging to 5.4volts

- The batteries shall not leak during the service life test before the end voltage reached.

3) The pluse load alone shall be applied across the battery. It is the effective load.It is not added in series or parallel to the Background load.

Импортер/Поставщик: ООО «А Зет»,
Российская Федерация, 142072, Московская область, г. Домодедово, мкр. Востряково
влад. «Триколор», стр.4. Тел: +7(495)926-50-50

4) MAD：minimum average duration--our guarantee discharge value.

5)Normal：normal data, it's our normal daily value, battereis dicharge value are on this as base to be upper or lower.

6. Leakage Resistance

6.1 Over discharge leakage test

Test conditions: 20±2℃ & RH 55±20%, 35mA continuous discharge 48h.
Number of test samples: 9 batteries
Requirement: No visible leakage; No explosion.

6.2 High temperature leakage test

Test conditions: store 20 days under 60±2℃, then store 4~24h under standard environment.
Number of test samples: 24 batteries
Requirement: No visible leakage; No explosion.

7. Security Characteristics

7.1 User Drop Test

This test simulates the situation when a battery is accidentally dropped.
Test conditions: Undischarged test batteries shall be dropped from a height of 1 m onto a concrete surface. Each test battery shall be dropped six times, once in each face. The test batteries shall be stored for 1 h afterwards.
Number of test sets: 5 batteries
Requirement: No fire, No explosion.

7.2 Short-circuit explosion-proof characteristics

This test simulates an external short circuit of a battery during daily handling of batteries.
Test conditions: Positive and negative terminals of an undischarged battery shall be connected directly. The circuit shall be completed for 24 h or until the battery case temperature has returned to ambient. The resistance of the inter-connecting circuitry shall not exceed 0,1 Ω.
Number of test samples: 5 batteries
Requirement: No fire or explosion; Leakage is allowable.

8. Expiry Date:

7 years

9. Expiry Date Marking:

9.1 Unless otherwise specified, each battery will carry a manufacturing date code followed by month and year of manufacturing for domestic and manufacturing date code followed by month and year of expiry for export. (Shelf life 5 years)

10. Packaging Requirements

10.1 The total of heavy metal lead, cadmium, mercury, and hexavalent chromium concentration shall not exceed 100 ppm in Packaging materials and printing inks. Ozone depleting substances (ODS) shall not be used in the manufacturing of any packaging.

Импортер/Поставщик: ООО «А Зет»,
Российская Федерация, 142072, Московская область, г. Домодедово, мкр. Востряково
влад. «Триколор», стр.4. Тел: +7(495)926-50-50

The printing on each cell label is legible and permanent. Label defects, if any, shall conform to mutually agreed upon limit samples.

10.2 It is recommended that packaging for shipment and sales according with Packaging Specification of CTAPT alkaline cell. For example, 1pc battery in a blister, 30 blisters in a display box, 4*2*1 display boxes in a final outer carton, and 4*2*4 outer cartons on a pallet. Flow chart as follows:

10.3 Otherwise packaging for shipment and sales shall conform to the mutually agreed to Packaging Specification of the designated customers.

Импортер/Поставщик: ООО «А Зет»,
Российская Федерация, 142072, Московская область, г. Домодедово, мкр. Востряково
влад. «Триколор», стр.4. Тел: +7(495)926-50-50

1

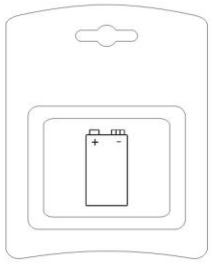

6LR61 1pcs–card

2

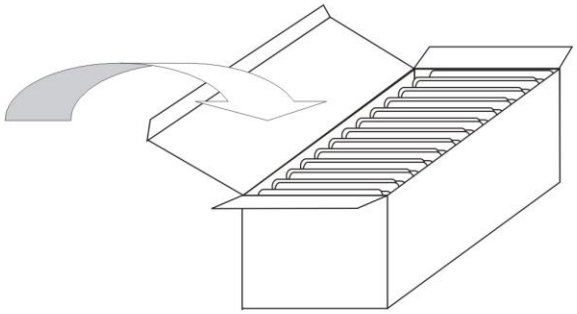

30 cards in a display box

3

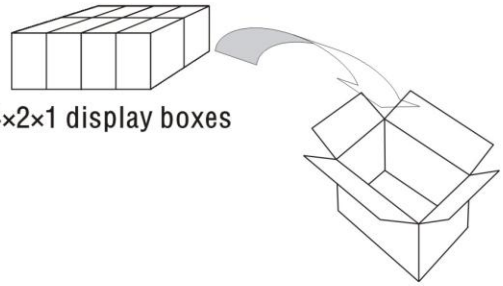

4×2×1 display boxes

outer carton

4

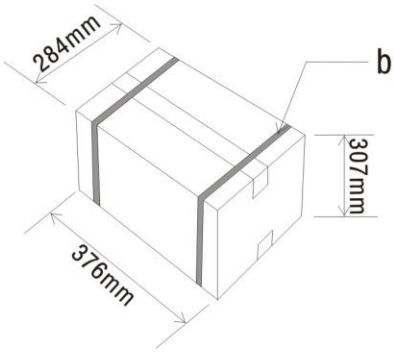

Gross weight:about13.9kg

5

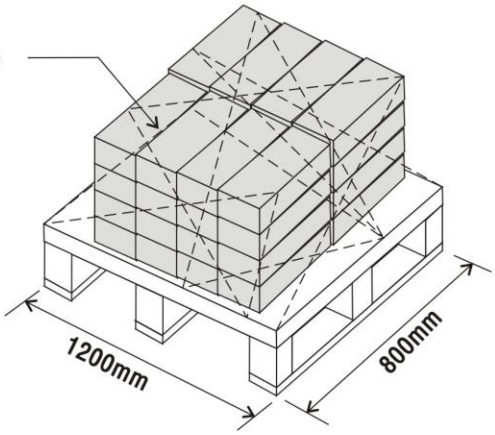

(4×2×4) outer boxes

Импортер/Поставщик: ООО «А Зет»,
Российская Федерация, 142072, Московская область, г. Домодедово, мкр. Востряково
влад. «Триколор», стр.4. Тел: +7(495)926-50-50

11. Component / Information of Ingredients

Chemical Nature: Alkaline zinc-manganese dioxide batteries

MATERIALS	APPROXIMATE PERCENT OF TOTAL WEIGHT (%)	CAS NO.	MATERIALS	APPROXIMATE PERCENT OF TOTAL WEIGHT (%)	CAS NO.
Manganese Dioxide (MnO2)	~34.0	1313-13-9	Brass	~4.3	12597-71-6
Zinc Powder (Zn)	~13.0	7440-66-6	Fe	~28.0	7439-89-6
Water (H2O)	~6.1	7732-18-5	Ni-plating	~0.3	7440-02-0
Potassium Hydroxide (KOH)	~1.5	1310-58-3	Bi	~0.0027	7440-69-9
Carbon	~1.96	7782-42-5	In	~0.0027	7440-74-6

Chart 1. Discharge diagram

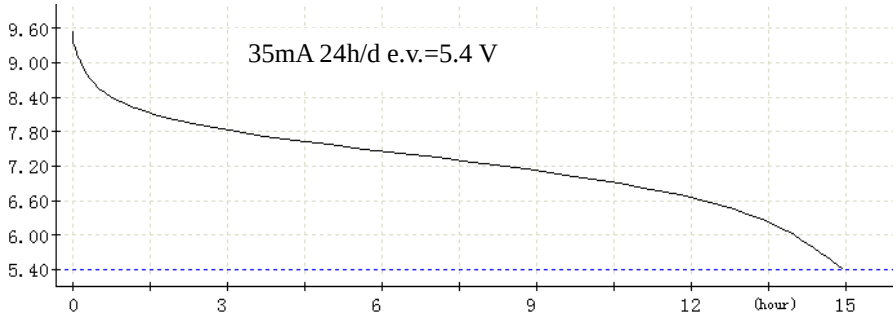

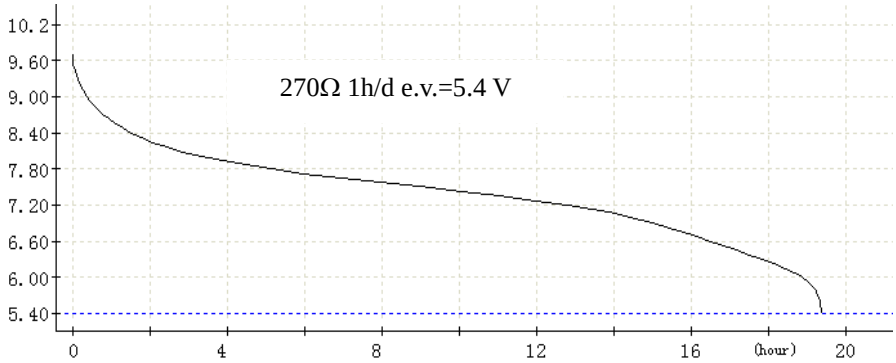

Импортер/Поставщик: ООО «А Зет», Российская Федерация, 142072, Московская область, г. Домодедово, мкр. Востряково влад. «Триколор», стр.4. Тел: +7(495)926-50-50